Current part is item (11) on diagram. Available at www.oshkoshequipment.com

UNIT, DIRECT SUPPORT, AND GENERAL SUPPORT MAINTENANCE
REPAIR PARTS AND SPECIAL TOOLS LIST

EXTENDED SERVICE PROGRAM (ESP)
TRUCK, CARGO, 2-1/2-TON, 6X6, M44A3 SERIES TRUCKS (DIESEL)

M35A3, W/O WINCH (NSN 2320-01-383-2047); W/WINCH (NSN 2320-01-383-3850);
M35A3C, W/O WINCH (NSN 2320-01-383-2050); W/WINCH (NSN 2320-01-383-2049);
M36A3, W/O WINCH (NSN 2320-01-383-2048); W/WINCH (NSN 2320-01-383-2046).

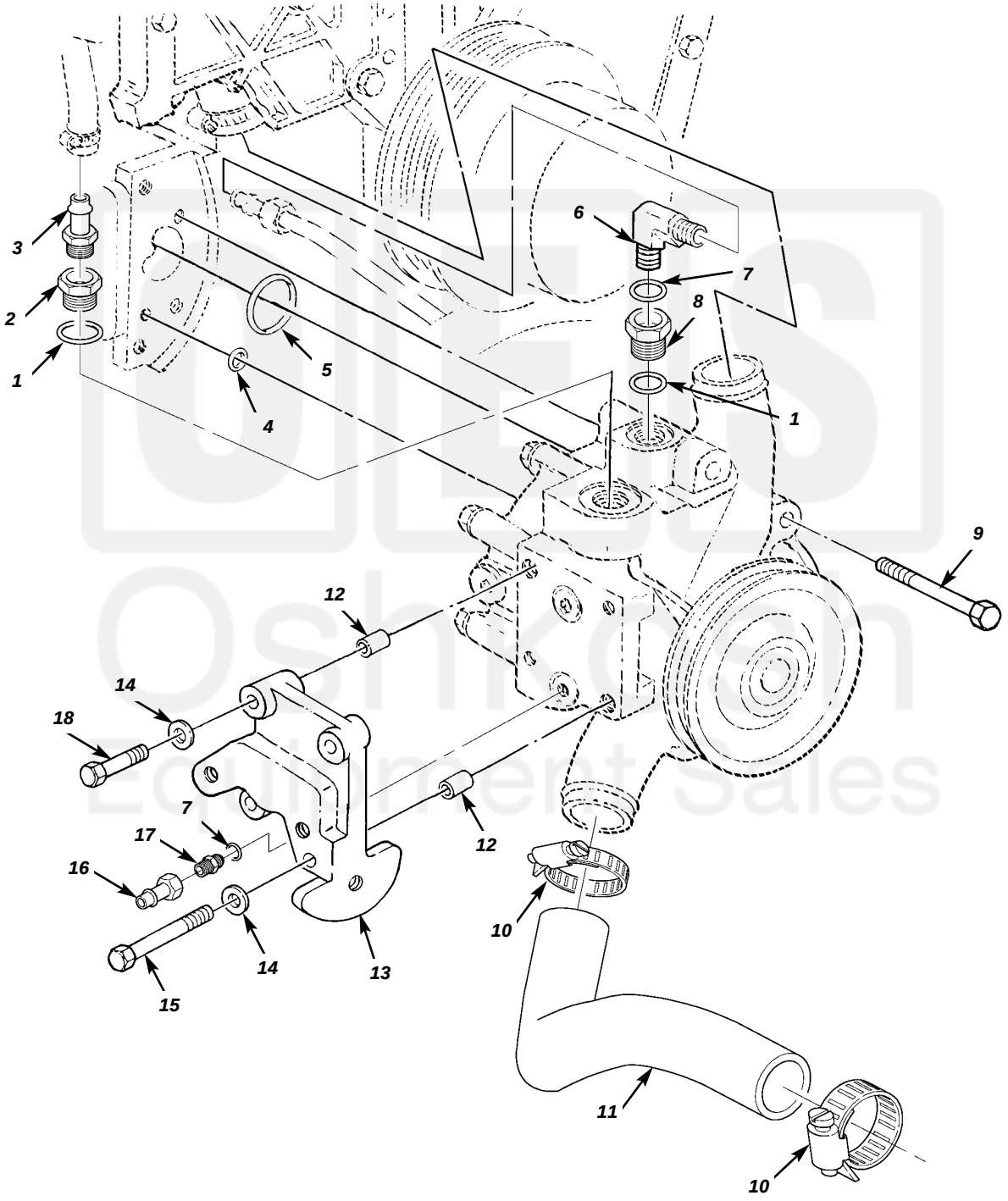

Figure 47. Water Pump Related Parts.

Current part is item (11) on diagram. Available at www.oshkoshequipment.com

Current part is item (11) on diagram. Available at www.oshkoshequipment.com

(1) ITEM NO	(2) SMR CODE	(3) NSN	(4) CAGEC	(5) PART NUMBER	(6) DESCRIPTION AND USABLE ON CODES(UOC)	(7) QTY
					GROUP 0504 WATER PUMP	
					FIG. 47 WATER PUMP AND RELATED PARTS	
1	PAOZZ	5331009448281	11083	3D2824	O-RING PART OF KIT P/N 4R9801 PART OF KIT P/N 7X2521 PART OF KIT P/N 7X2528 PART OF KIT P/N 9X8318.....	2
2	PAOZZ	4730013237200	81343	12-12 080103SAA	ADAPTER,STRAIGHT,PI.....	1
3	PAOZZ	4730014414387	81343	16-12 430160C	ADAPTER,STRAIGHT,PI.....	1
4	PAOZZ	5331000743768	11083	2M4453	O-RING PART OF KIT P/N 4R9801 PART OF KIT P/N 7X2528.....	1
5	PAOZZ	5331005277939	96906	MS9021-225	O-RING PART OF KIT P/N 4R9801 PART OF KIT P/N 7X2528.....	1
6	PAOZZ	4730008225609	96906	MS51527A8	ELBOW,TUBE TO BOSS.....	2
7	PAOZZ	5331009486482	11083	3K0360	O-RING PART OF KIT P/N 4R9801 PART OF KIT P/N 7X2521 PART OF KIT P/N 7X2528 PART OF KIT P/N 9X8318.....	2
8	PAOZZ	4730013607750	11083	6V1722	BUSHING,PIPE.....	1
9	PAOZZ	5305013601708	11083	8T0644	SCREW,CAP,HEXAGON H.....	4
10	PAOZZ	4730013316630	9C234	11669079-5	CLAMP,HOSE.....	2
11	PAOZZ	4720014081540	19207	12448577	HOSE,PREFORMED.....	1
12	PAOZZ	5340013601885	11083	7W3872	SHIELD,EXPANSION.....	2
13	PAOZZ	5342014493765	11083	4P2433	BRACKET,MOUNTING.....	1
14	PAOZZ	5310013598806	11083	8T4224	WASHER,FLAT.....	4
15	PAOZZ	5305013981287	11083	8T6912	SCREW,CAP,HEXAGON H.....	1
16	PAOZZ	4730002339911	98441	30682-10-10	ADAPTER,STRAIGHT,TU.....	1
17	PAOZZ	4730012633084	30780	0503-8-10	ADAPTER,STRAIGHT,TU.....	1
18	PAOZZ	5306014079016	11083	8T4197	BOLT,MACHINE.....	3

END OF FIGURE

Current part is item (11) on diagram. Available at www.oshkoshequipment.com